Brake Buddy®

manufactured
after 9/15/06

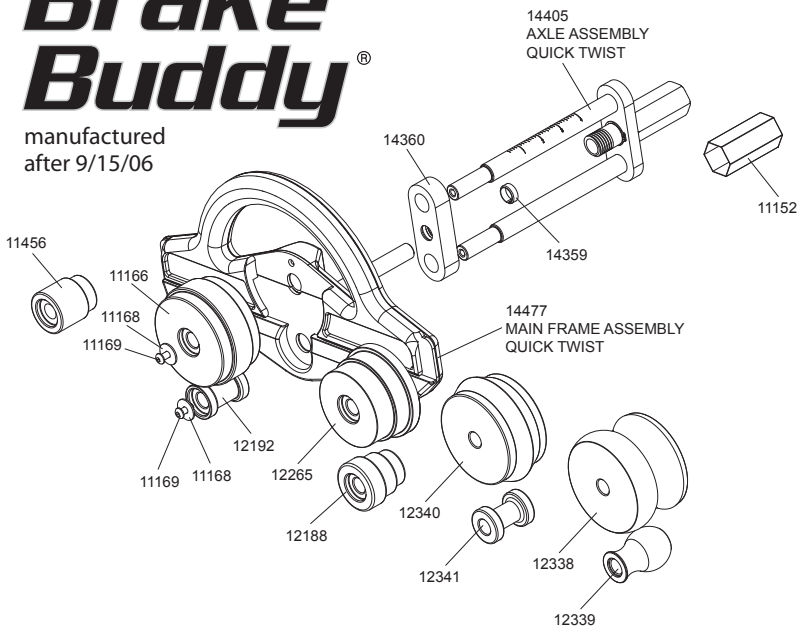

Item #	Description
11152	Handle Grip
14405	Axle Assembly
14477	Main Frame Assembly
11166	Rib Roller Upper
12192	Rib Roller Lower (steel)
11168	Washer
11169	Roller Cap Screw
12265	Graduated Brick Mold Upper Roller
12188	Graduated Brick Mold Lower Roller (steel)
11456	Graduated Traditional Brick Mold Lower Roller (Steel)
12340	V-Groove Upper Roller
12341	V-Groove Lower Roller
12338	Crown Molding Upper Roller
12339	Crown Molding Lower Roller
14359	Plastic Collet
BRAKE BUDDY (prior to 9/15/06)	
11152	Handle Grip
11168	Washer
11169	Roller Screw Cap
11374	Axle Assembly
11166	Upper Rib/Fascia Roller
12192	Lower Rib/Fascia Roller
12340	Upper V Groove Roller
12341	Lower V Groove Roller
Brake Buddy purchased prior to 3/15/04	
11163	Upper Brick Mold Roller
12302	Steel Original Brick Mold Lower Roller
12306	Steel Original Traditional Brick Mold Roller

BRAKE Buddy

manufactured
prior to 9/15/06

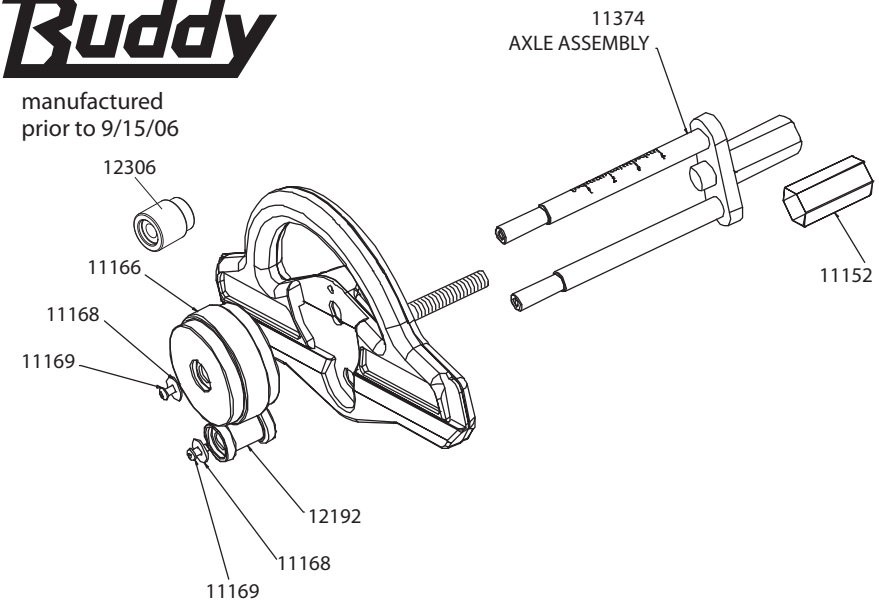

© 2022 Westlake Royal Building Products